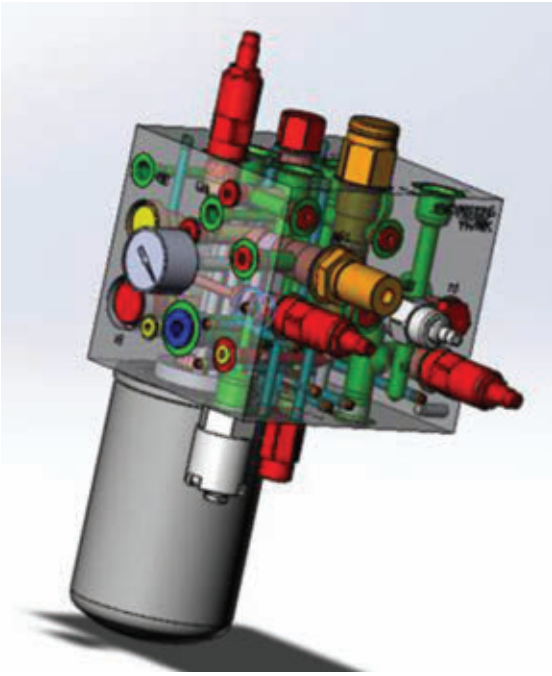

JEM Technical is a Minnesota-based fluid power distributor that is establishing a broader niche as a supplier of custom valve manifolds and manifold packages for a range of applications, both within and outside of its distribution territory.

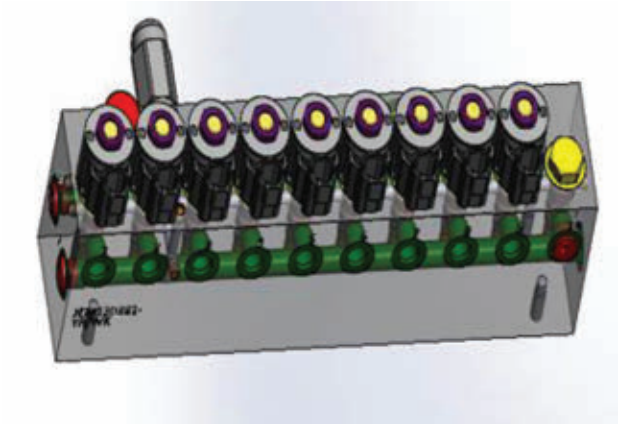

MORE THAN A DISTRIBUTOR

JEM Technical develops growing niche as supplier of highly engineered hydraulic valve manifold packages

BY MIKE BREZONICK

From the outside, JEM Technical looks pretty much like most other fluid power distributors. The company offers an extensive range of hydraulic products such as valves, pumps and motors, filtration products, couplings, gauges, controls and joysticks, which it sells into a territory that includes Minnesota, parts of Wisconsin, the Dakotas, Canada and Florida.

Look a little closer, though, and it's clear that JEM — which was founded by John Eric Menge (hence the JEM acronym) and his wife in 1984 — is something more than a distributor. The company has established a growing niche as a supplier of custom valve manifolds and manifold packages for a range of applications, both within and outside of its distribution territory.

"Being a fluid power distributor is really about 15% of our business, so it's kind of a misnomer," said Ross Fisher, director of sales and marketing at the Orono, Minn., company. "We're a small manufacturer and have been ISO 9001 registered since 2003. We use other people's components like everybody does, but we are also engineering, assembling and packaging and adding a lot of value. We create custom manifold solutions and electronics packages for our customers.

"We have a solid engineering and applications team of 18 people here at JEM for both our core valve business and electronics. Our team is well experienced and has expertise on valves. We know the right valve to put in the circuit that best satisfies the machine function. And we can match the electronics for superior control."

The valve expertise isn't surprising, seeing as JEM started out in 1984 as a manufacturer's rep and was an early distributor for HydraForce, a global specialist in cartridge valves.

"When he started, John Menge was working out of his house and had four or five product lines," Fisher said. "He knew the guys at HydraForce, so when HydraForce was getting started, he pushed for the line, and soon after, JEM became one of HydraForce's top distributors.

"He got the HydraForce line and ran with it, and in the late 1990s, (HydraForce co-founder) Dick Fontecchio advised the original distributors that they should invest in machining and start making their own manifold blocks.

"John took that advice and invested in horizontal and vertical machining

JEM Technical produced more than 140,000 manifolds in 2014, and the company also manufactures its own spool valves, check valves and relief valves. The company is consolidating its production and assembly into two buildings that include its headquarters and a new 33,000 sq.ft. machining and manufacturing facility at the same site.

centers, and the business took off from there."

JEM, which is now in its second generation of Menge family leadership — Andrea Tysdal, John Menge's daughter, became president of the company early this year — has prospered by focusing on highly engineered, highly customized manifolds (it produced more than 140,000 manifolds last year), valves and manifold packages that are designed and built in-house. Fisher said that "85% of our business is our custom-designed JEM manifolds and special valves that we make in-house.

"We make our own spool valves, check valves and relief valves that meet space savings or special performance needs. We mix those with traditional cartridge valves to give our customers the best economical solution.

"We're able to control a big piece of the cost, and we can do some special things that make our products unique. A typical custom manifold has around five to eight cartridges in a manifold, but we'll do some that have 40 cartridges in them. With the custom business we do, it's all over the map."

That also describes JEM's business in terms of markets. "We've traditionally been in turf, construction, forestry and specialty machines," Fisher said. "We're a little bit in ag, but not too heavy, which is probably good right now.

"We've started doing a lot of different things with boat builders in Florida. A lot of steering systems, rudder controls and trim tabs are hydraulic. We're also doing boat davits. On (Donald) Trump's boat, the davits are basically like a crane that they use to pick up the smaller boat they use as a runabout boat. Those davits are hydraulic.

"Strategically, we don't like seeing more than 20% of our business in one market segment. I've worked at places where if one market crashes, the company crashes. We're trying to spread the base here by expanding geographically and into somewhat nontraditional customer markets."

Fisher said that JEM serves "a lot of the big companies in our markets," such as Bobcat, Toro and Terex. "But as important is our core base of smaller and mid-sized OEMs (original equipment manufacturers)," he said. "These are our 25- to 100-piece-a-year customers. We can offer the smaller manufacturer the design and engineering expertise and support they need, and also we fit nicely with the multinational global customer as we meet their design timing and ISO level quality processes."

In 2014, JEM launched its JEM Controls division, which has developed a line of electronics, displays, joysticks and electrical accessories that complement the JEM distribution lines, custom valves and components offerings.

Along with the broadening product scope, another tangible sign of JEM's evolution can be seen in its facilities. Just over three years ago, it moved into a 40,000 sq.ft. purpose-built facility that includes office staff, engineering and sales as well as 20,000 sq.ft. dedicated to warehouse and assembly. Machining and other manufacturing operations have been done at two remote 13,000 and 5000 sq.ft. locations. "We've always kept assembly and machining separate," Fisher said. "When you're assembling manifold packages that require a clean environment, you want to keep the chips away."

However, JEM is currently in the final stages of consolidating the machining and manufacturing operations into a single 33,000 sq.ft. building just behind the company's headquarters. "This consolidation adds 35% more footprint, and we are excited to utilize the space for supporting our current customer base and for planned future growth," Fisher said. "A big plus will be having our two facilities on a common campus about 100 yards from each other. We're still going to keep the machining and assembly separate, but it's a lot closer. We will be into that building by the end of this year and ready for new business." **dp**

diesel Weblink

www.jemtechnical.com